The Solution

For Mobile & CCTV
& Lens

YUJIN ELECTRIC CORP.

Model: VM12001

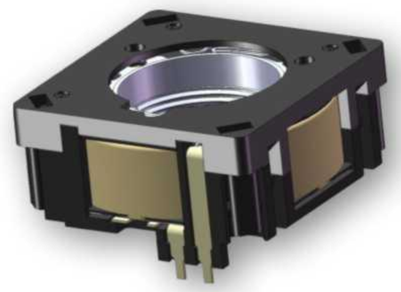

Typical Applications: Auto focus module for cell phone, laptop computer, web camera and video mornitoring system

Motor Code	Motor Size	Barrel Size	Rated Current	Rated Stroke
VM12001	12X12X5.3	M7XP0.35	80mA	0.33mm MIN.
Starting Current	Terminal Resistance	Motion Step	Mass(Without Lens)	Suggestion of Lens Unit Mass
12～25mA	28.0Ω±10%	＜10μm	1.3g(Approx)	0.21g MAX.

Derection of movement: From sensor side to lens top side when (+)voltage is applied to (+)terminal

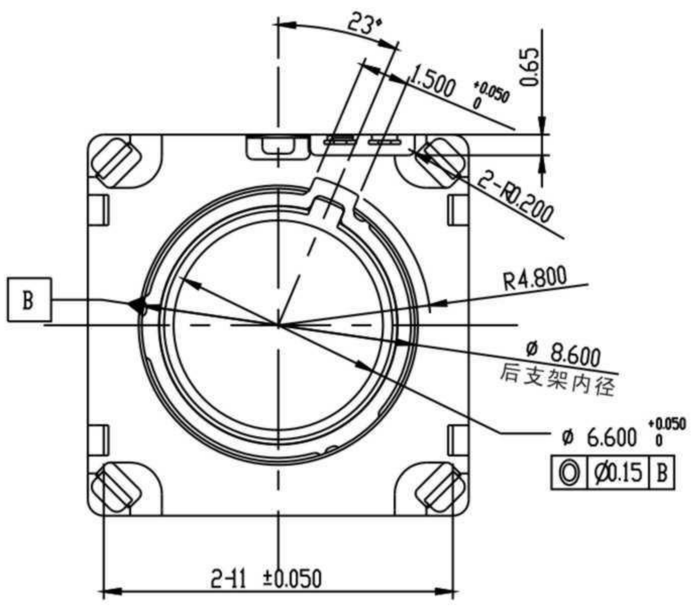

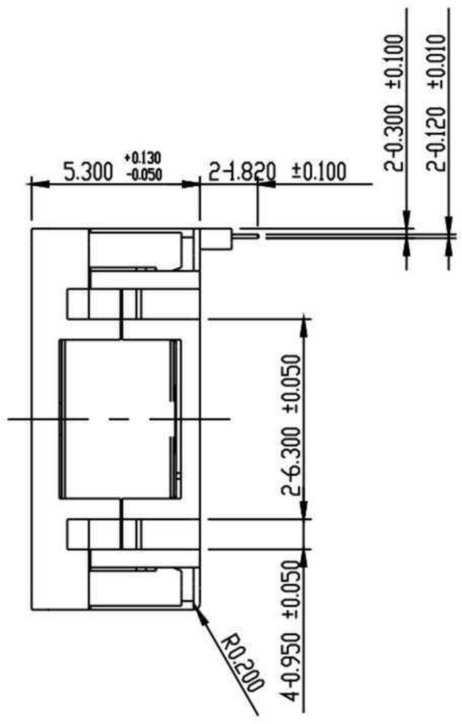

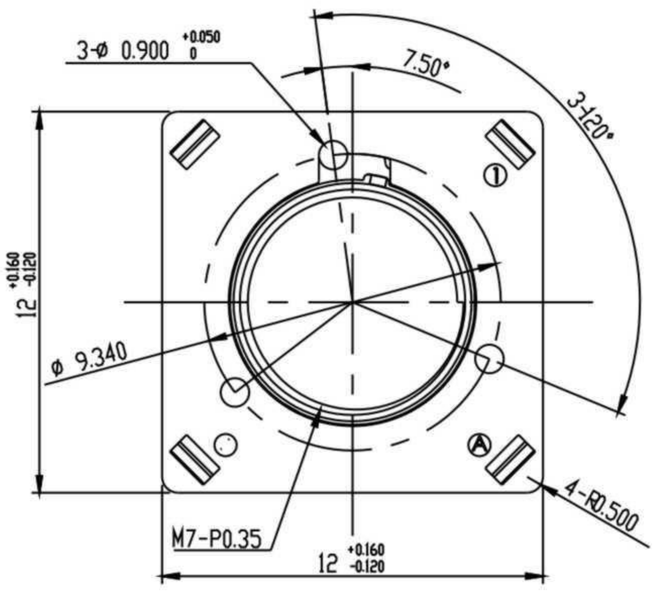

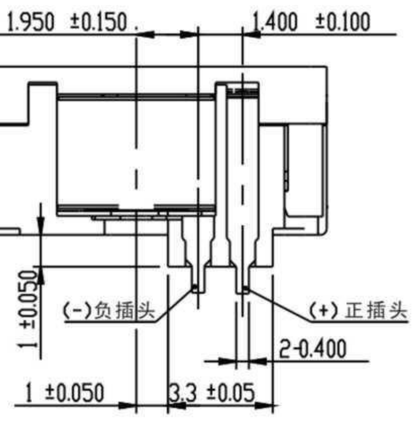

Model: VM10002

Typical Applications: Auto focus module for cell phone, laptop computer, web camera and video mornitoring system

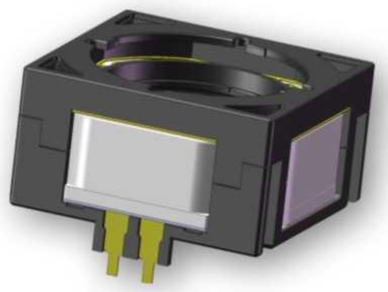

Motor Code	Motor Size	Barrel Size	Rated Current	Rated Stroke
VM10002	10X10X5.3	M7XP0.35	80mA	0.33mm MIN.
Starting Current	Terminal Resistance	Motion Step	Mass(Without Lens)	Suggestion of Lens Unit Mass
12～25mA	28.0Ω±10%	＜10μm	0.8g(Approx)	0.17g MAX.

Derection of movement: From sensor side to lens top side when (+)voltage is applied to (+)terminal

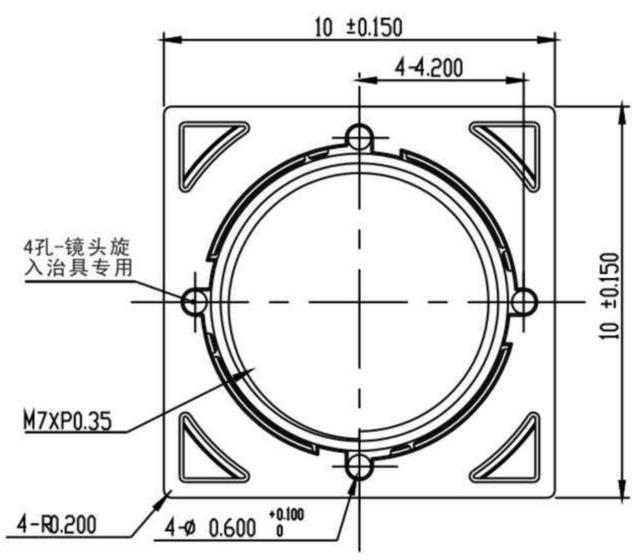

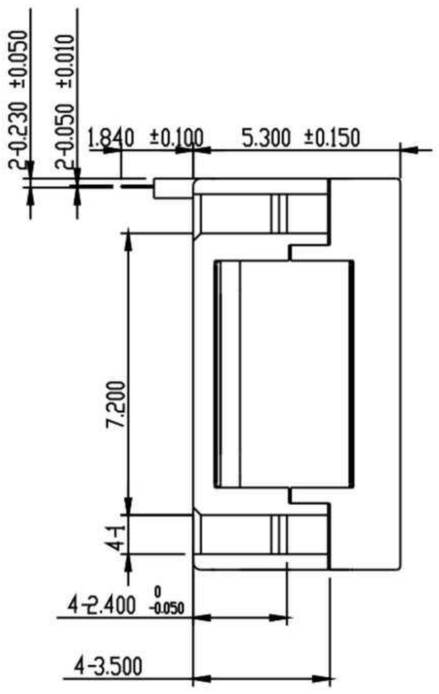

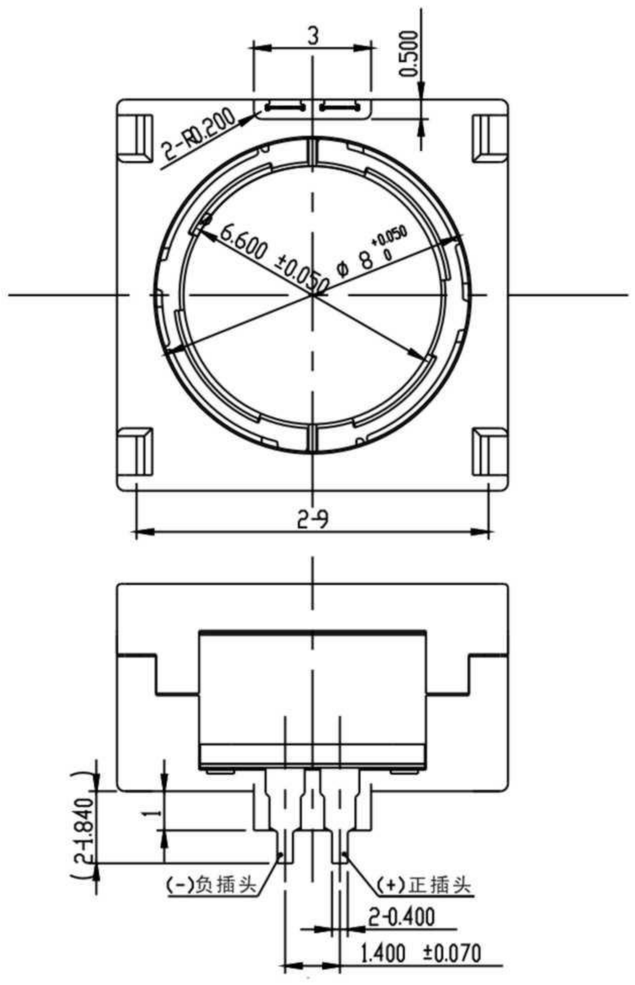

Model: VM10001

Typical Applications: Auto focus module for cell phone, laptop computer, web camera and video mornitoring system

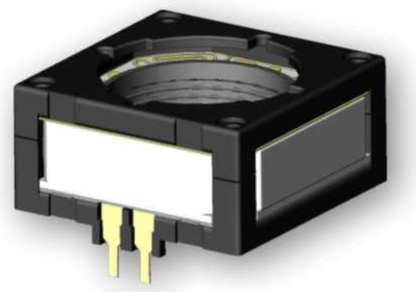

Motor Code	Motor Size	Barrel Size	Rated Current	Rated Stroke
VM10001	10X10X4.6	M7XP0.35	80mA	0.25mm MIN.
Starting Current	Terminal Resistance	Motion Step	Mass(Without Lens)	Suggestion of Lens Unit Mass
12～25mA	20.0Ω±10%	＜10μm	0.75g(Approx)	0.13g MAX.

Derection of movement: From sensor side to lens top side when (+)voltage is applied to (+)terminal

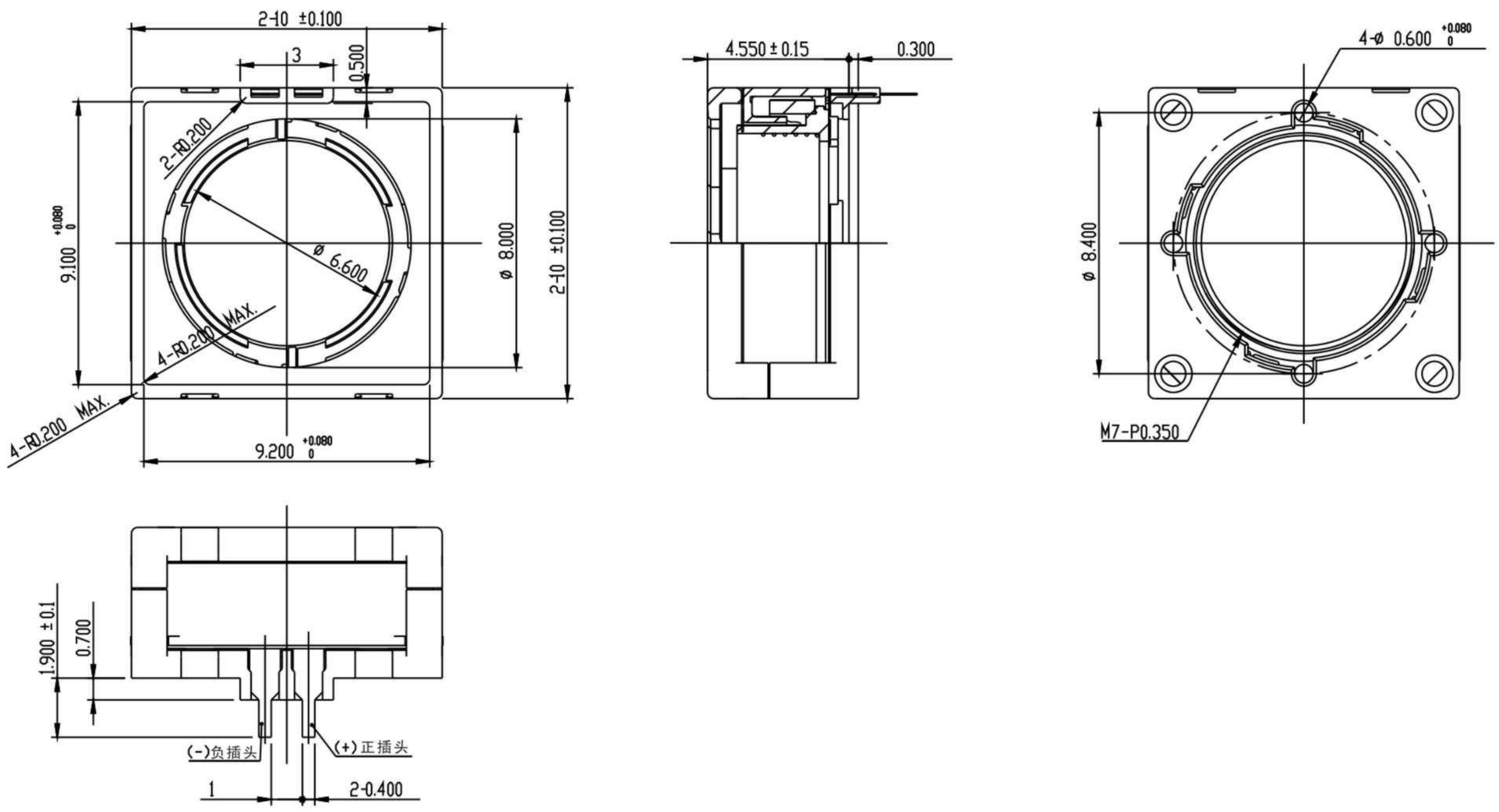

Model: VM8Z001

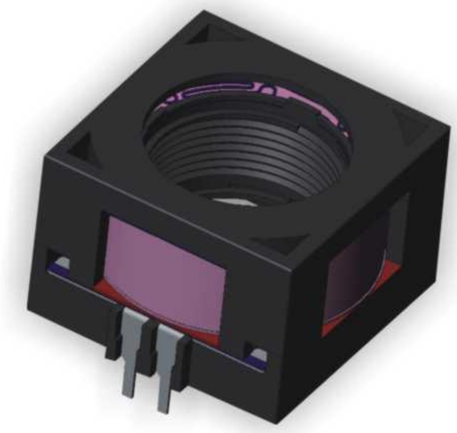

Typical Applications:Auto focus of mobile phone and Laptop computer

Motor Code	Motor Size	Barrel Size	Rated Current	Rated Stroke
VM8Z001	8.5X8.5X4.2	M6XP0.35	80mA	0.23mm MIN.
Starting Current	Terminal Resistance	Motion Step	Mass(without lens)	Suggestion of Lens Unit Mass
12～25mA	20.0Ω±10%	＜10μm	0.75g(Approx)	0.13g MAX.

Derection of movement: From sensor side to lens top side when (+)voltage is applied to (+)terminal

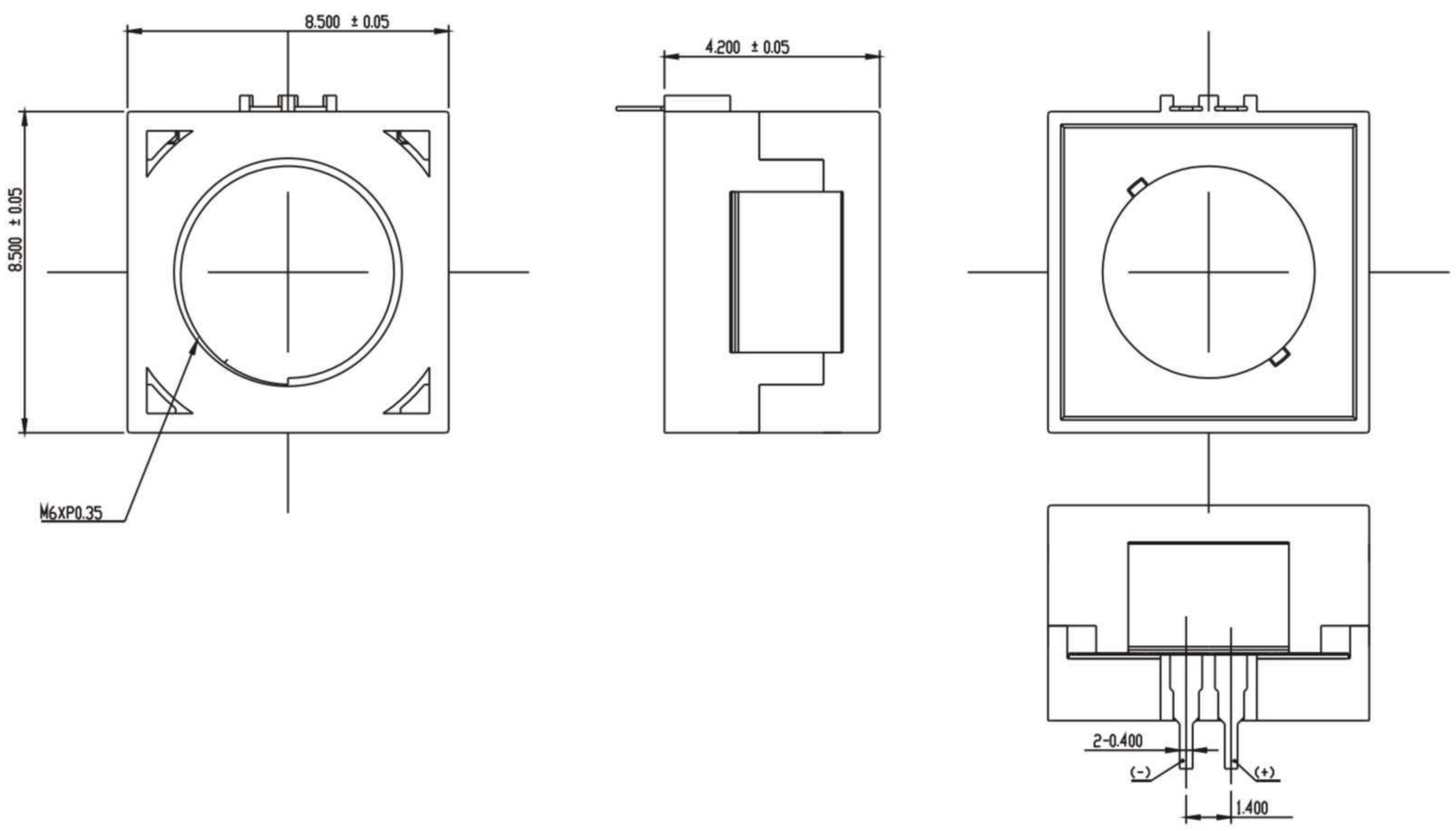

Characteristics

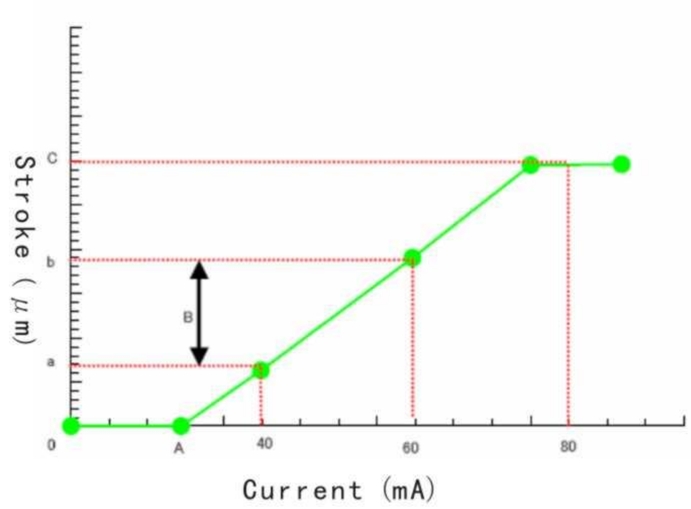

A. Starting current
B. Stroke increase
C. Stroke at 80mA
A=40-a÷{B÷(60-40)}
B=b-a

Measurement
Current:Stroke
40mA:a mm
60mA:b mm
80mA:c mm

Model: GM08001

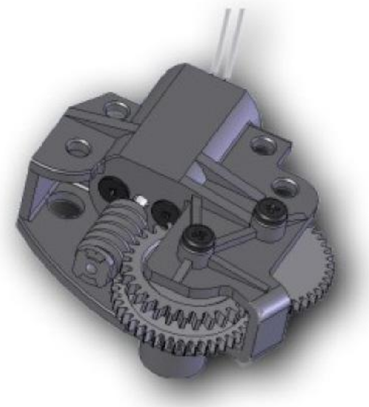

Motor&Gear Box Module

Typical Applications: General micro motion module for web camera, video mornitoring system,screen lift

Electrical Performance

Motor Code	Voltage		Rated				Stall		
			Speed	Current	Rated Loading		Torque		Current
	Operating Range	Nominal Voltage	Rpm	Amp	mNm	g-cm	mNm	g-cm	Amp
GM08001	2.00-6.00V	3.50V	16	0.05	7.50	75	68.60	700	0.26

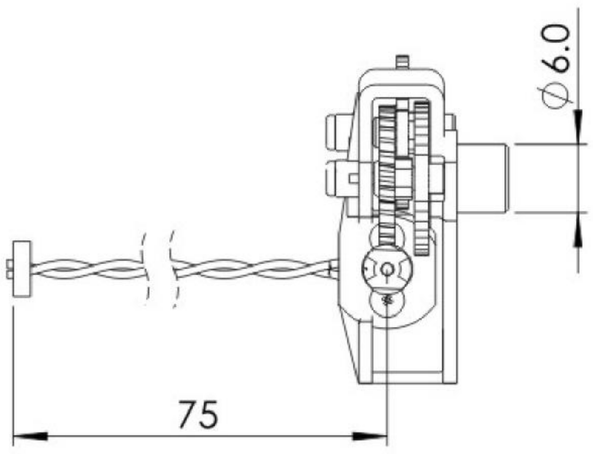

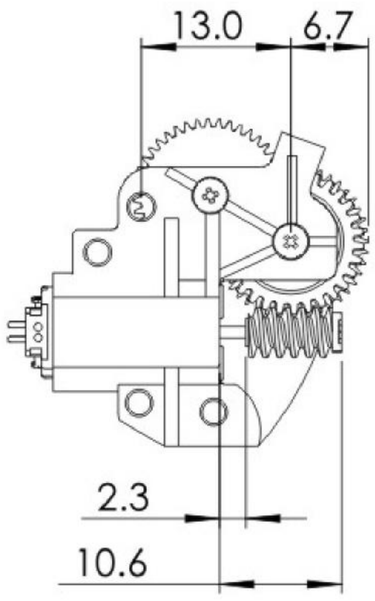

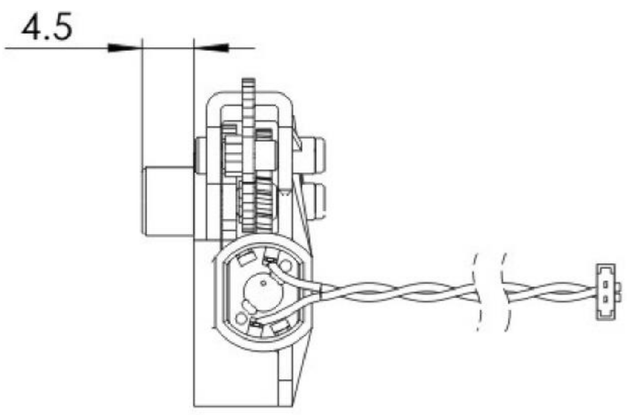

Model: GM08006

Motor&Gear Box Module

Typical Applications: General micro motion module for web camera, video mornitoring system,screen lift

Electrical Performance

Motor Code	Voltage		Rated				Stall		
			Speed	Current	Rated Loading		Torque		Current
	Operating Range	Nominal Voltage	Rpm	Amp	mNm	g-cm	mNm	g-cm	Amp
GM08006	2.00-6.00V	4.40V	14	0.06	15.70	160	58.80	600	0.27

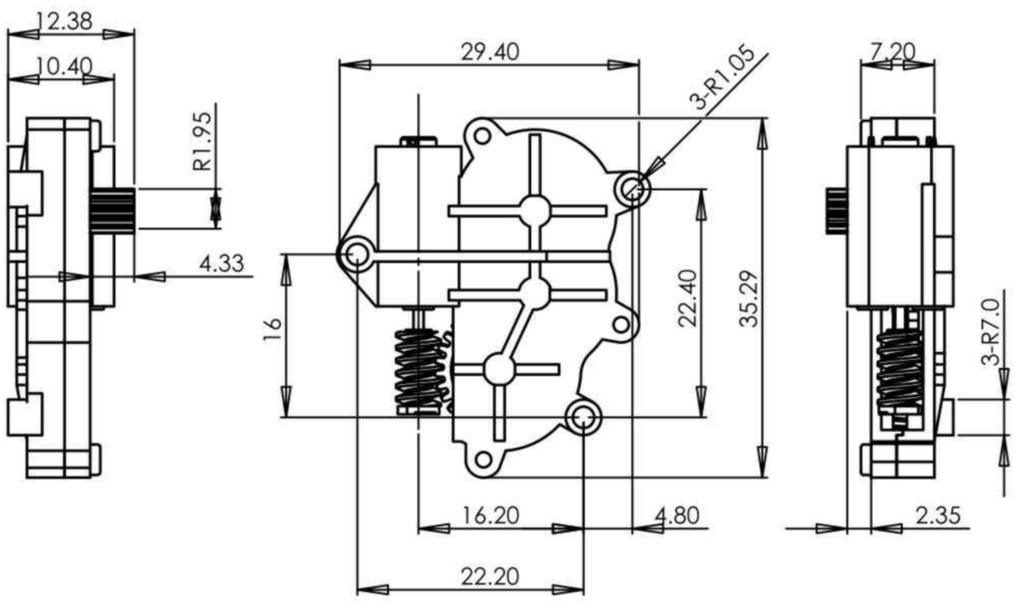

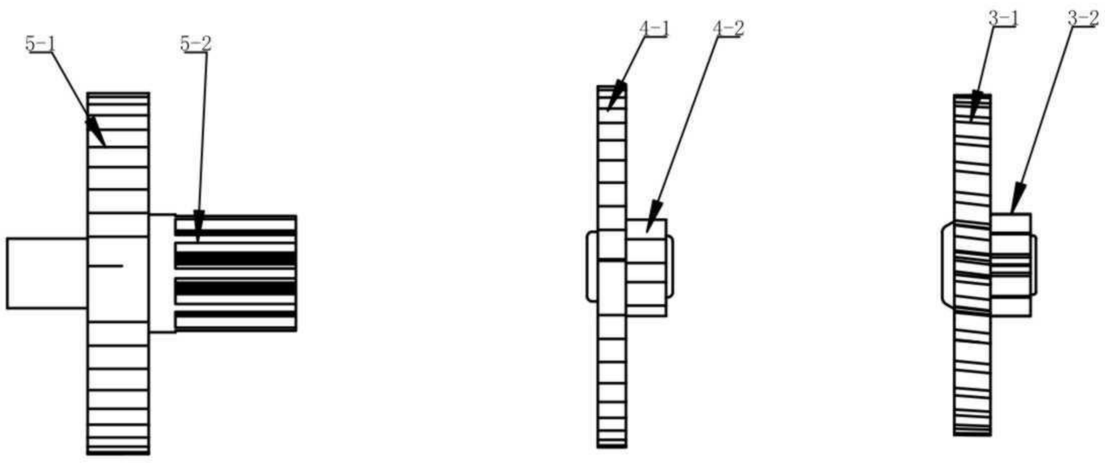

Model: GM08008

Motor&Gear Box Module

Typical Applications: General micro motion module for web camera, video mornitoring system,screen lift

Electrical Performance

Motor Code	Voltage		Rated				Stall		
			Speed	Current	Rated Loading		Torque		Current
	Operating Range	Nominal Voltage	Rpm	Amp	mNm	g-cm	mNm	g-cm	Amp
GM08008	1.50-3.50V	3.00V	20	0.05	1.96	20	23.5	240	0.15

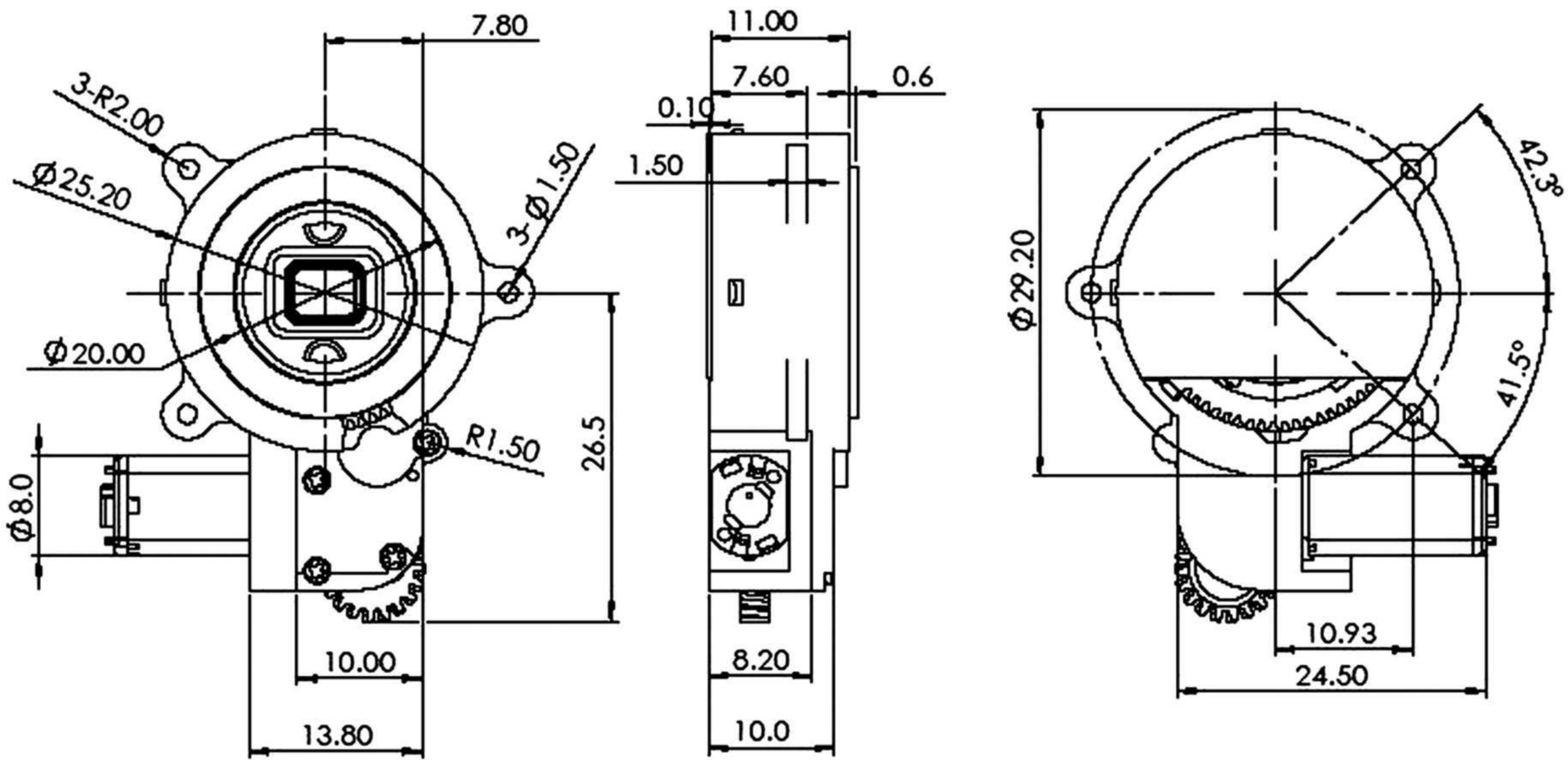

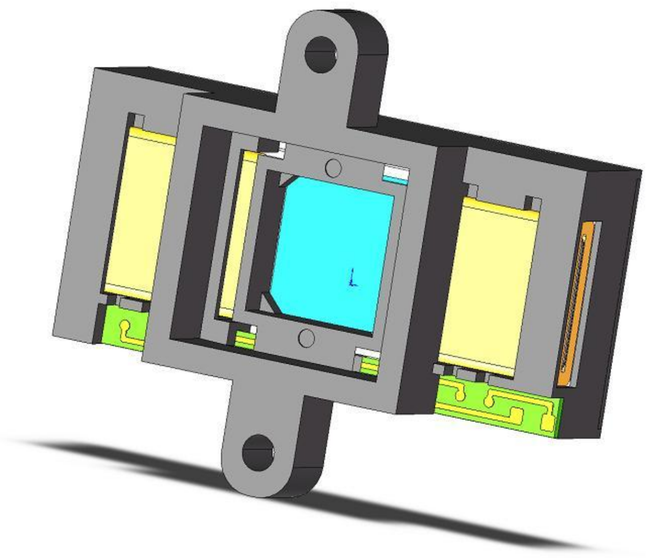

Model: IM25001

Typical Applications:IR cut filter

Theory : Blue glass works at daytime to forbid the Infra-red , and the black glass works at nightthe Infra-red will go throuth the black glass.

Motor Code	Motor Size	Rated Current	Motor Resistance	Starting Current	Mass
IM25001	26.8X31X9.6	120mA	180Ω±10%	100mA	4.0g(Approx)

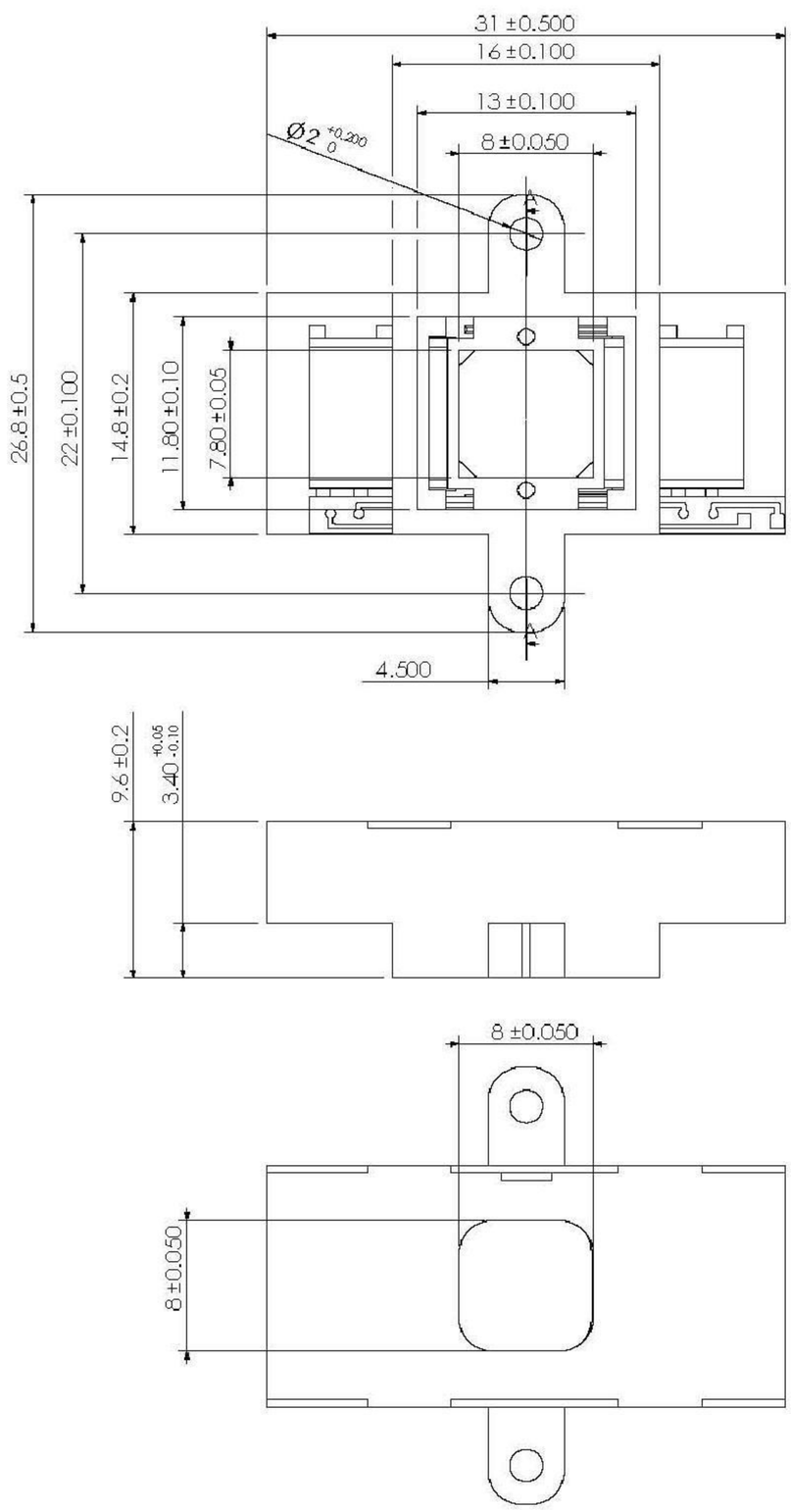

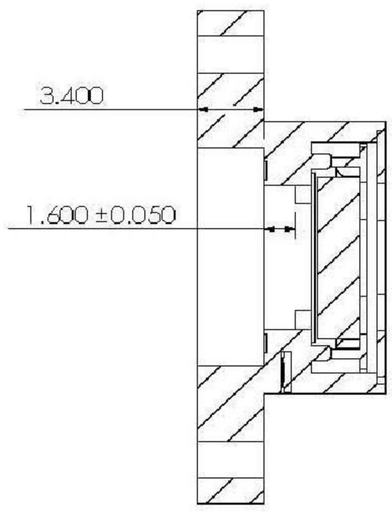

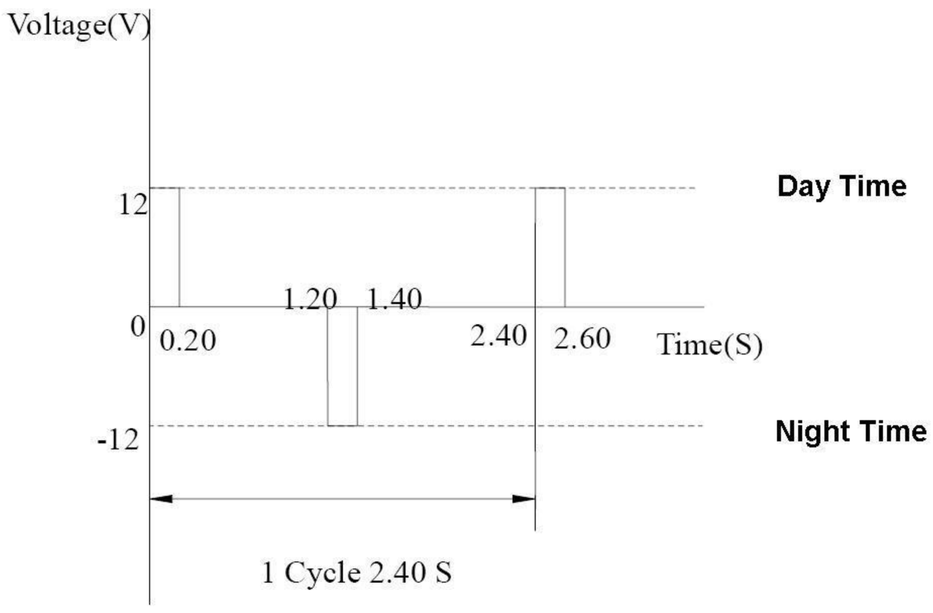

Model: AM12020

Precious metal-brush motors

0.04W~1.60W (APPROX) WEIGHT: 8.00g (APPROX)

Typical Applications: Audio and Visual Equipment: Portable CD Player/Car CD/DVD
Home Appliances

Electrical Performance

Motor Code	Voltage		No Load		Maximum Efficiency					Stall		
			Speed	Current	Speed	Current	Torque		Output	Torque		Current
	Operating Range	Nominal Voltage	Rpm	Amp	Rpm	Amp	mNm	g-cm	W	mNm	g-cm	Amp
AM12020	1.40-6.00V	2.50V	5300	0.015	4220	0.059	0.16	1.60	0.07	0.78	8	0.23

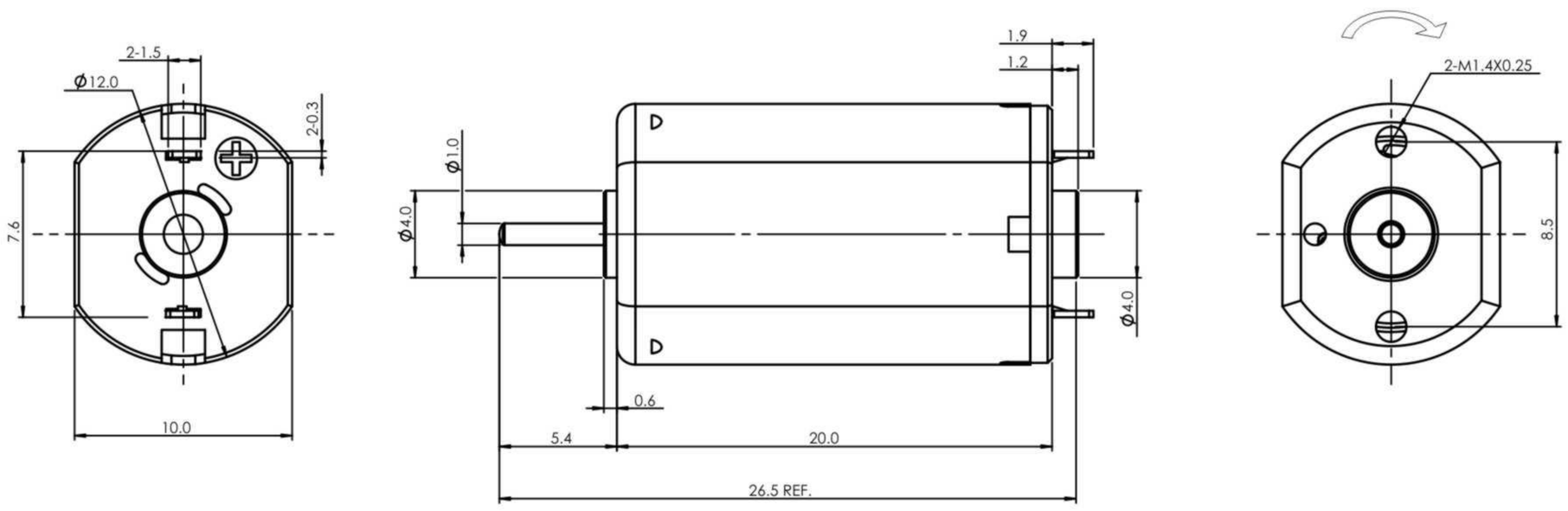

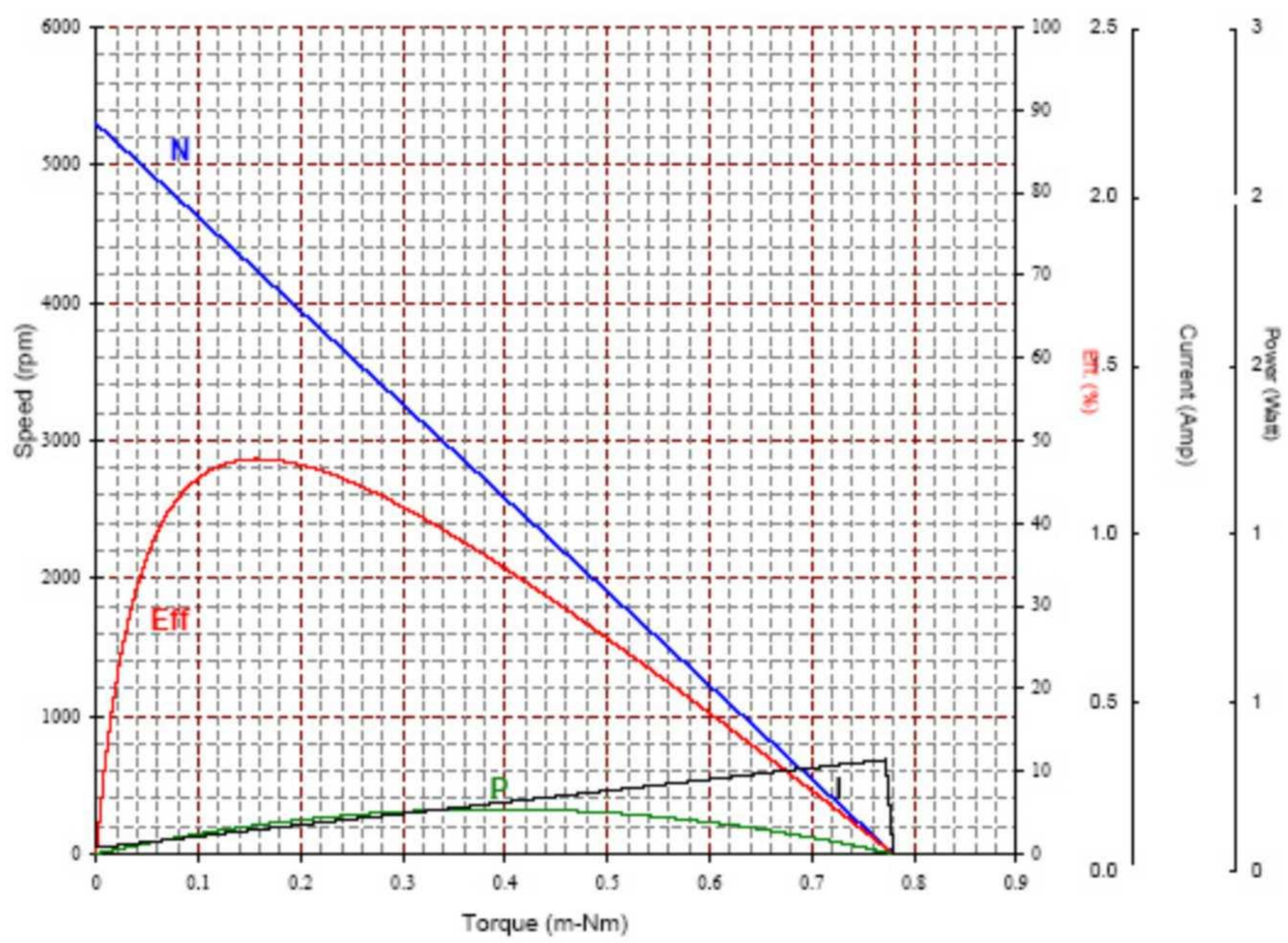

Model: AM12001

Precious metal-brush motors

OUTPUT: 0.03W~1.00W (APPROX) WEIGHT: 5.00g (APPROX)

Typical Applications: Audio and Visual Equipment: Car CD/ MD Player/Camcorder
Precision Instruments: Camera

Electrical Performance

Motor Code	Voltage		No Load		Maximum Efficiency					Stall		
	Operating Range	Nominal Voltage	Speed	Current	Speed	Current	Torque		Output	Torque		Current
			Rpm	Amp	Rpm	Amp	mNm	g-cm	W	mNm	g-cm	Amp
AM12001	1.00-3.00V	1.50V	6000	0.038	4550	0.11	0.17	1.70	0.09	0.70	7.10	0.36

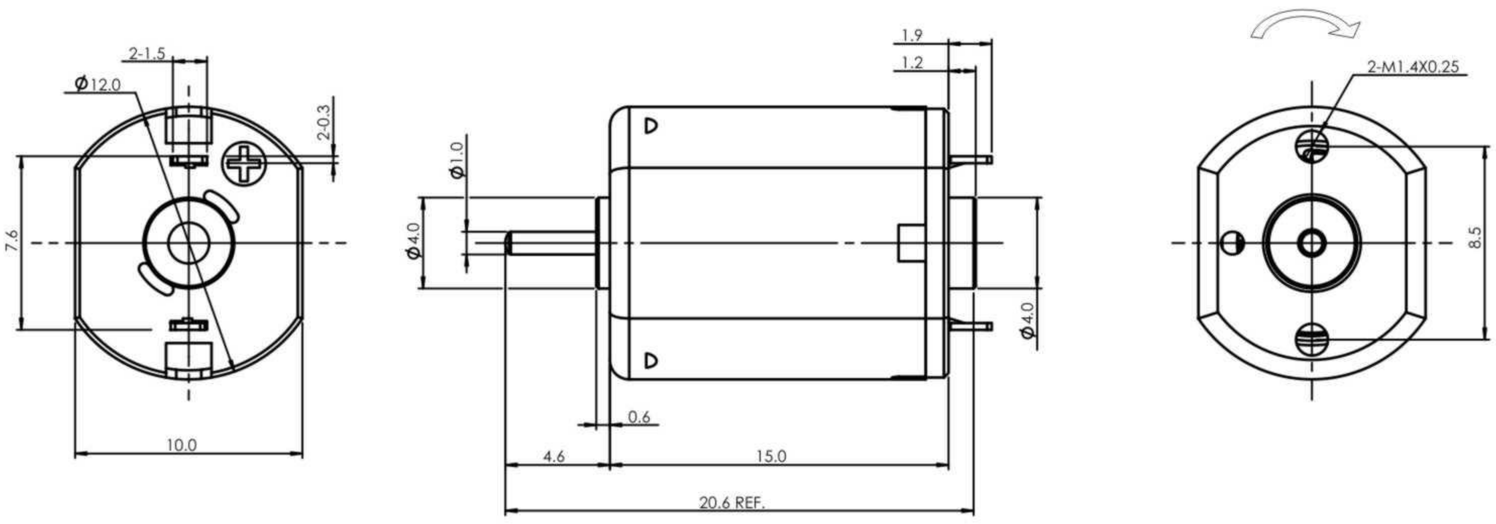

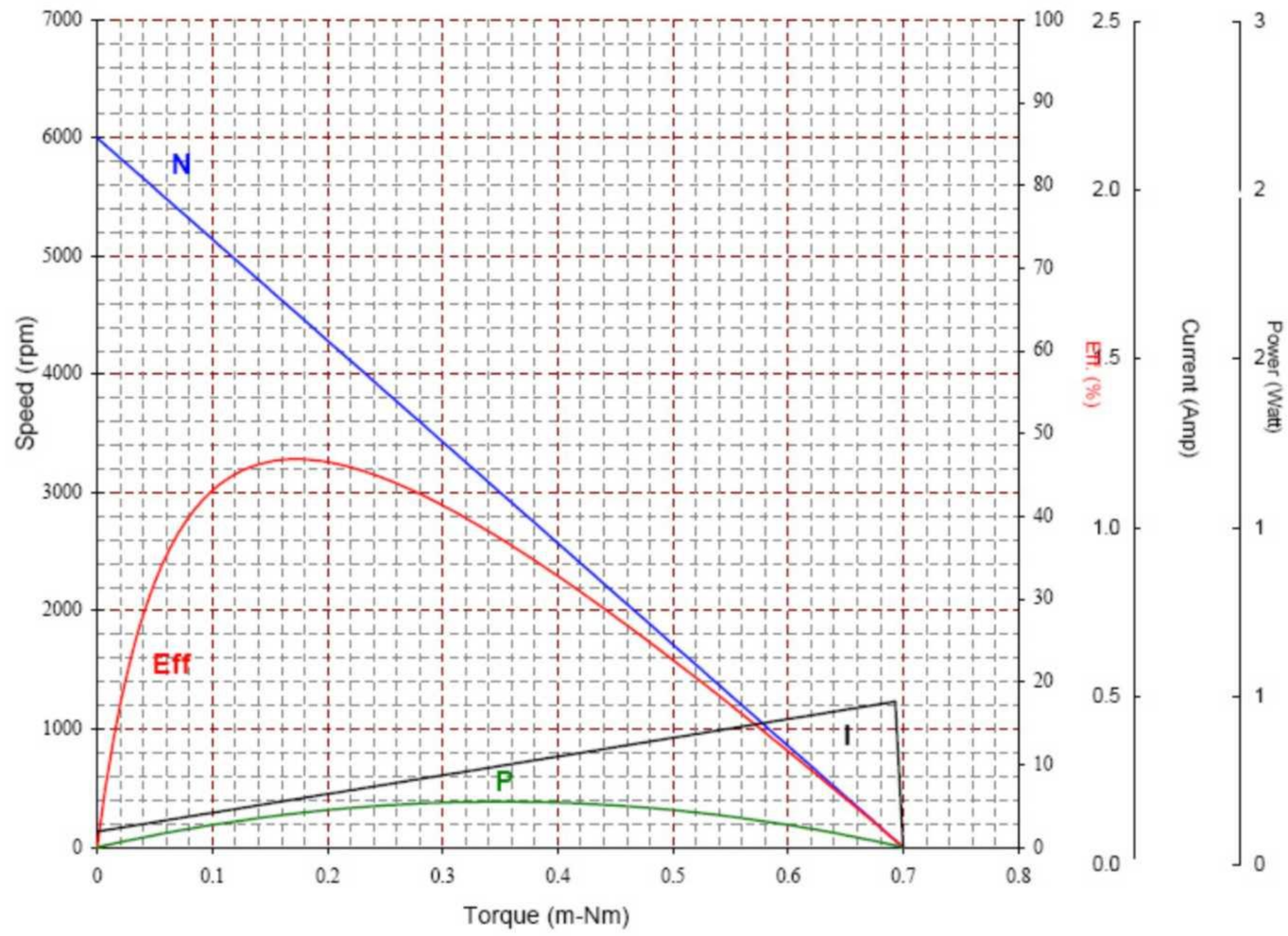

Model: AM10020

Typical Applications: various optical,audio and personal equipment

Electrical Performance

Motor Code	Voltage		No Load		Maximum Efficiency					Stall		
	Operating Range	Nominal Voltage	Speed	Current	Speed	Current	Torque		Output	Torque		Current
			Rpm	Amp	Rpm	Amp	mNm	g-cm	W	mNm	g-cm	Amp
AM10020	1.00-4.50V	2.50V	13800	0.059	11060	0.234	0.253	2.53	-	1.425	14.25	0.94

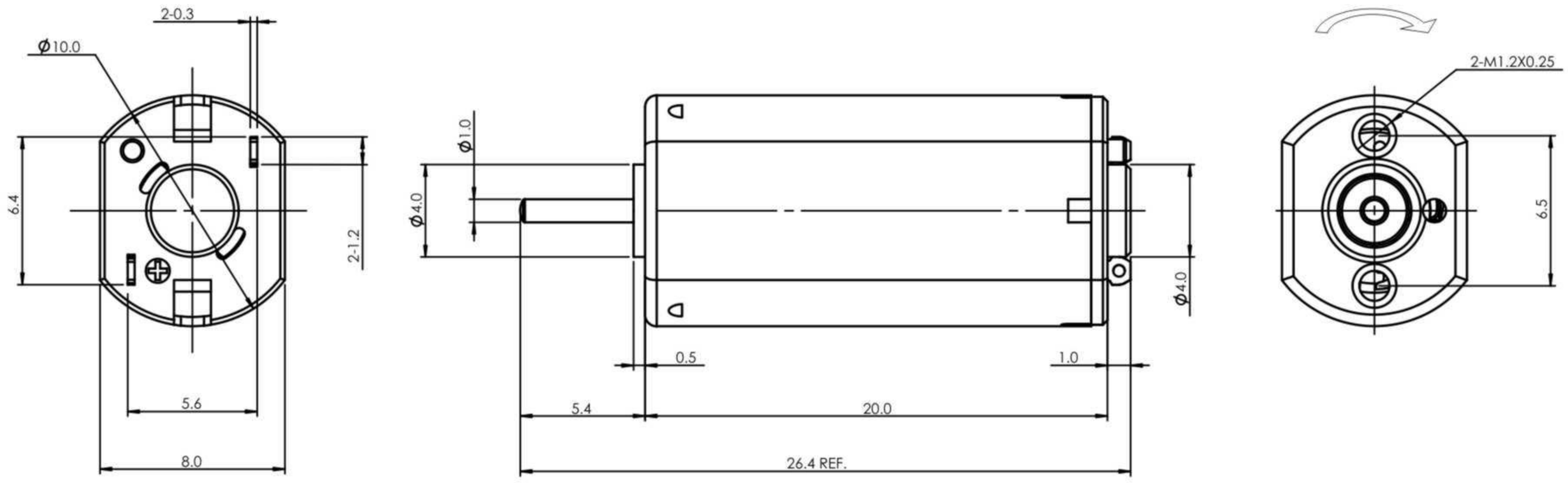

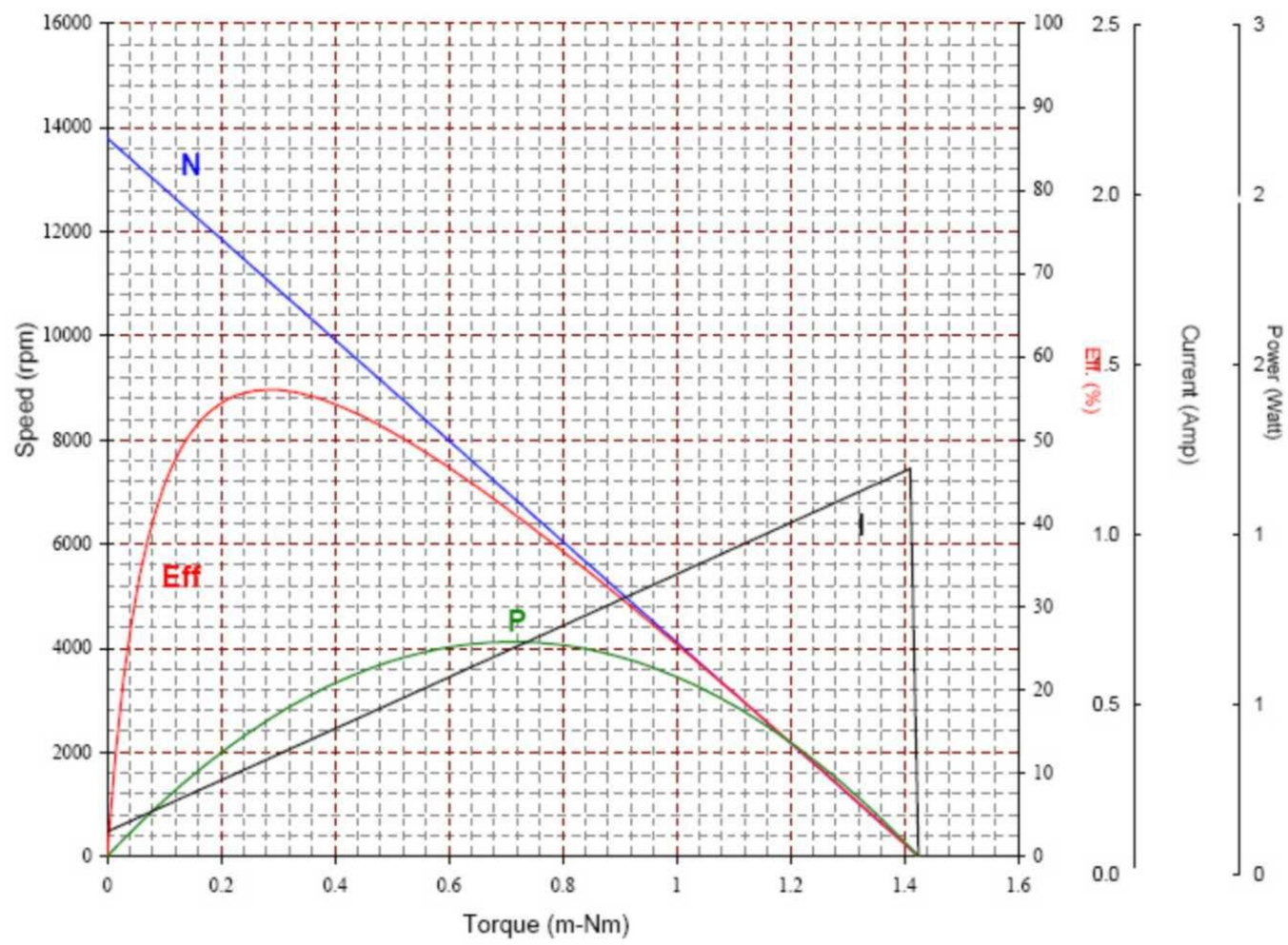

Model: AM10010

Typical Applications: various optical,personal equipment

Electrical Performance

Motor Code	Voltage		No Load		Maximum Efficiency					Stall		
	Operating Range	Nominal Voltage	Speed	Current	Speed	Current	Torque		Output	Torque		Current
			Rpm	Amp	Rpm	Amp	mNm	g-cm	W	mNm	g-cm	Amp
AM10010	1.30-5.00V	3.00V	13000	0.023	10000	0.076	0.098	1.00	0.10	0.42	4.30	0.25

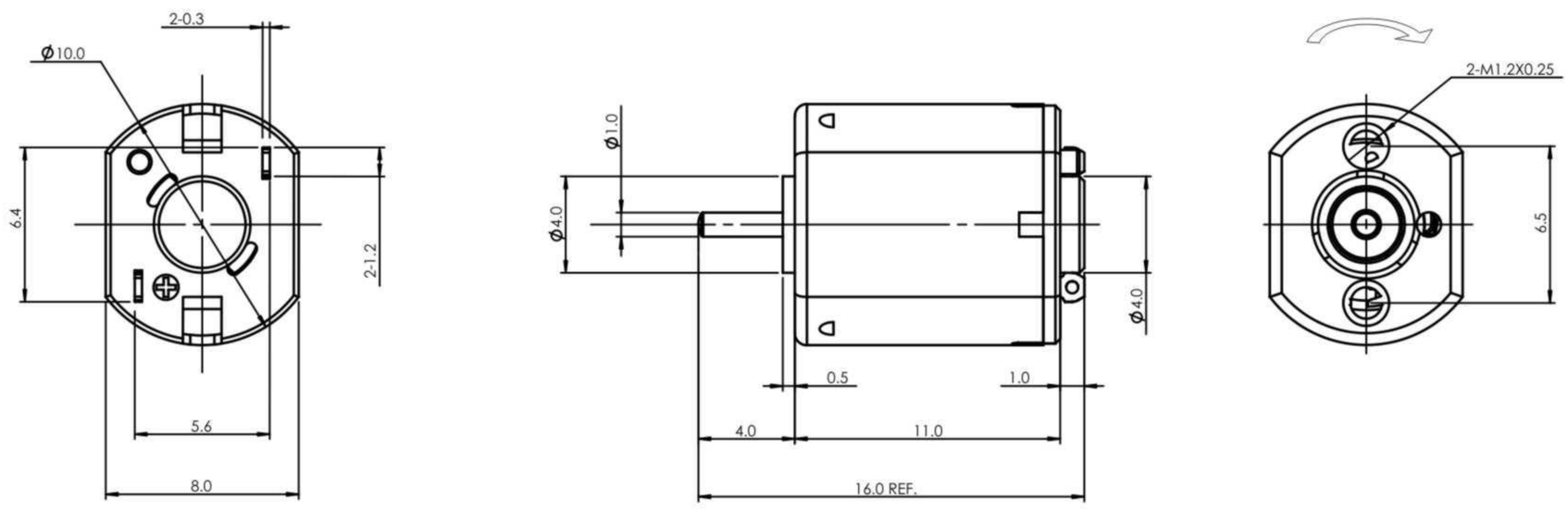

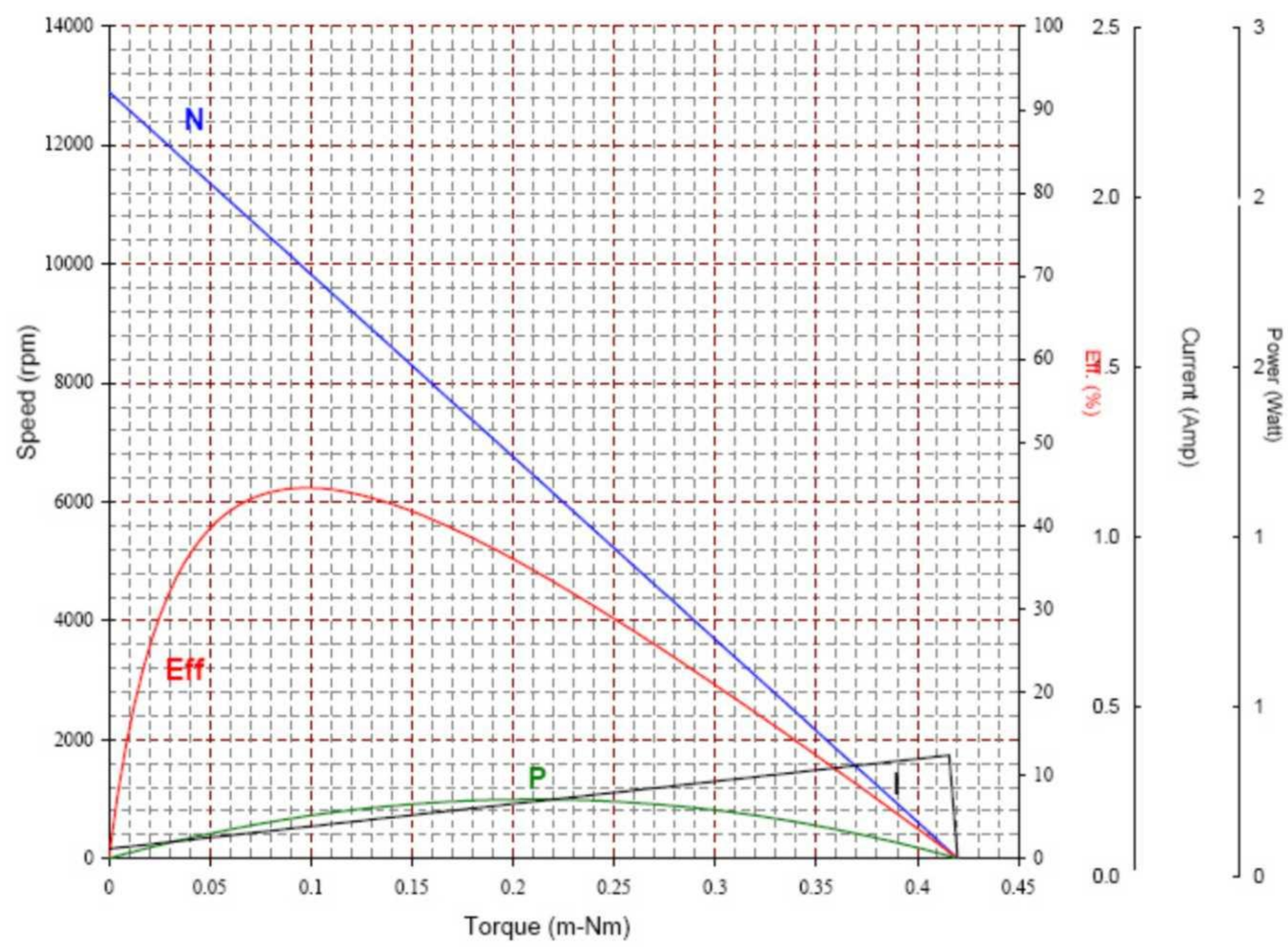

Model: AM10001

Precious metal-brush motors

OUTPUT: 0.05W~0.80W (APPROX) WEIGHT: 4.00g (APPROX)

Typical Applications: Audio and Visual Equipment: MD Player/ Car CD Player/Camcorder
Precision Instruments: Camera

Electrical Performance

Motor Code	Voltage		No Load		Maximum Efficiency					Stall		
	Operating Range	Nominal Voltage	Speed	Current	Speed	Current	Torque		Output	Torque		Current
			Rpm	Amp	Rpm	Amp	mNm	g-cm	W	mNm	g-cm	Amp
AM10001	3.00-5.00V	4.00V	21000	0.045	16800	0.18	0.23	2.40	0.41	1.20	12.20	0.76

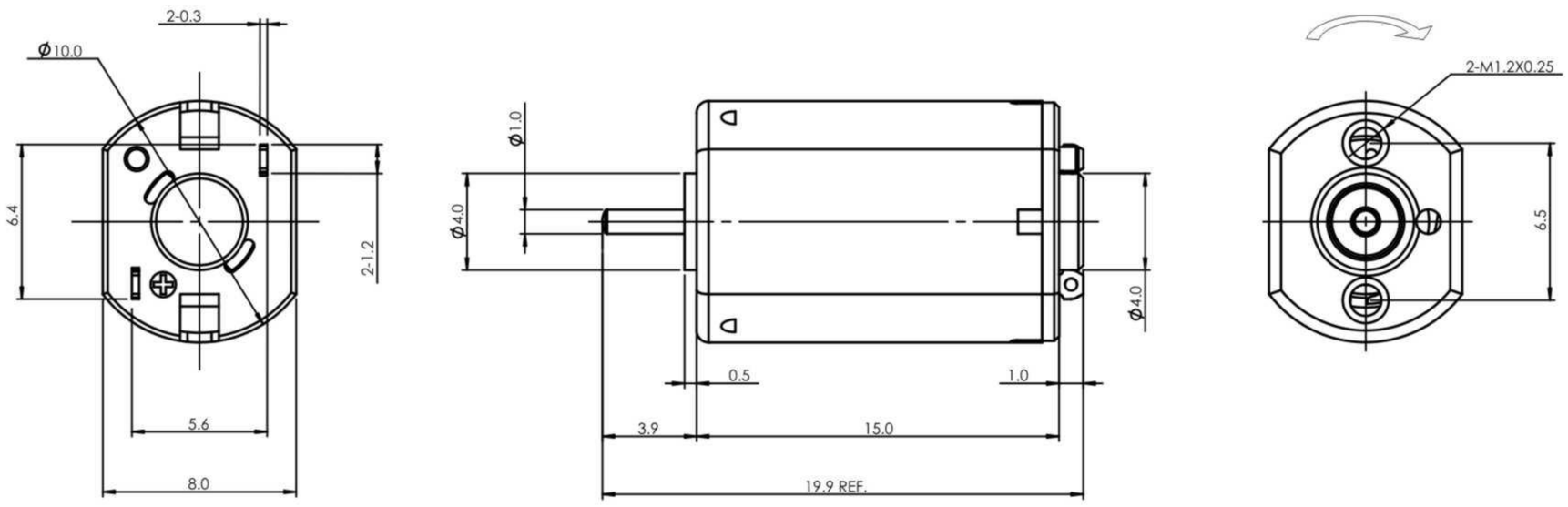

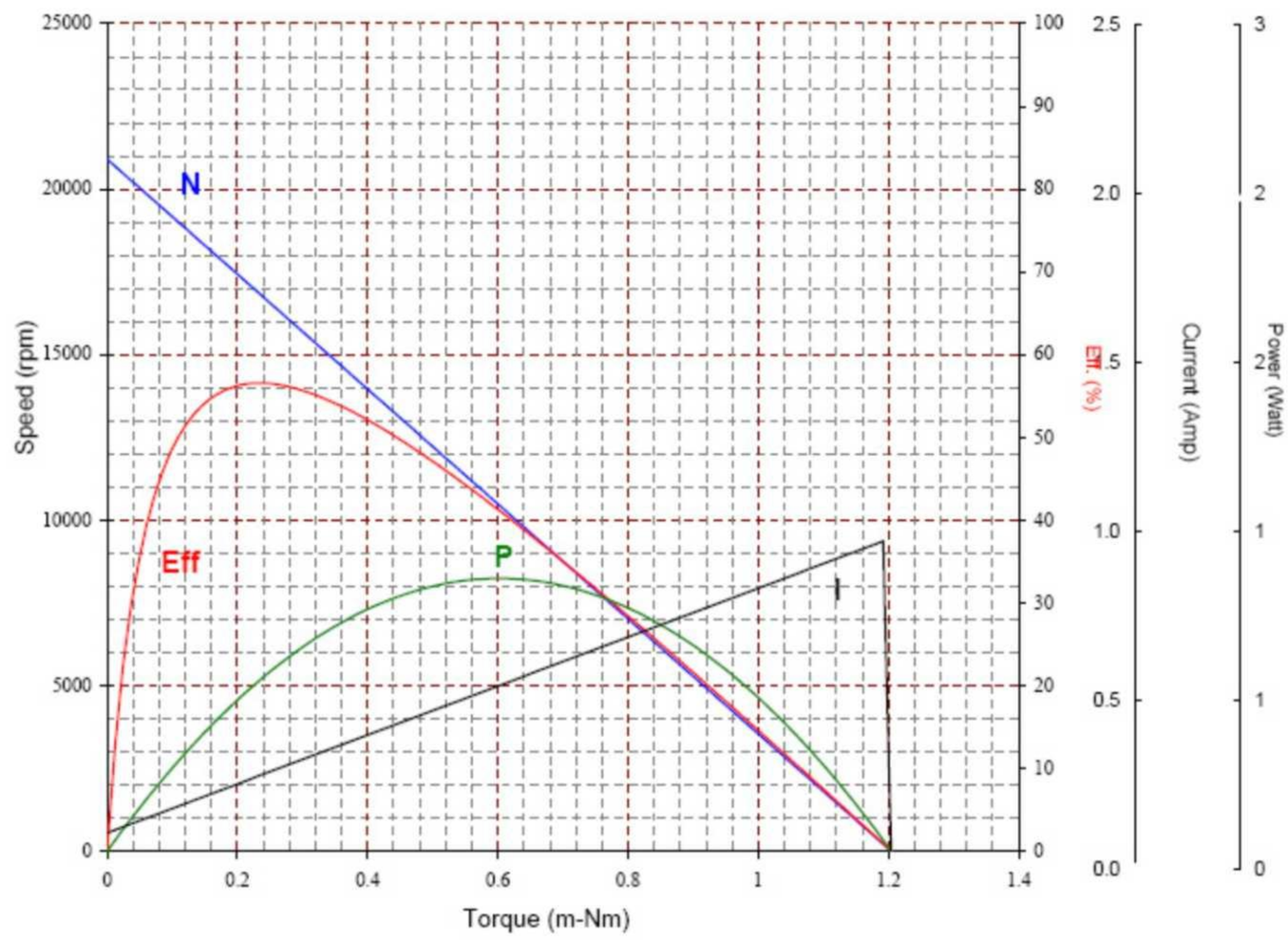

Model: AM08020

Precious metal-brush motors

OUTPUT: 0.07W~0.40W (APPROX) WEIGHT: 3.60g (APPROX)

Typical Applications: Audio and Visual Equipment: Portable CD Player/ Car CD Player
Office Automation Equipment: Note Book PC/CD/DVD-ROM Drive

Electrical Performance

Motor Code	Voltage		No Load		Maximum Efficiency					Stall		
	Operating Range	Nominal Voltage	Speed	Current	Speed	Current	Torque		Output	Torque		Current
			Rpm	Amp	Rpm	Amp	mNm	g-cm	W	mNm	g-cm	Amp
AM08020	4.20Max	3.00V	15200	0.028	12020	0.11	0.12	1.30	0.16	0.59	6.00	0.40

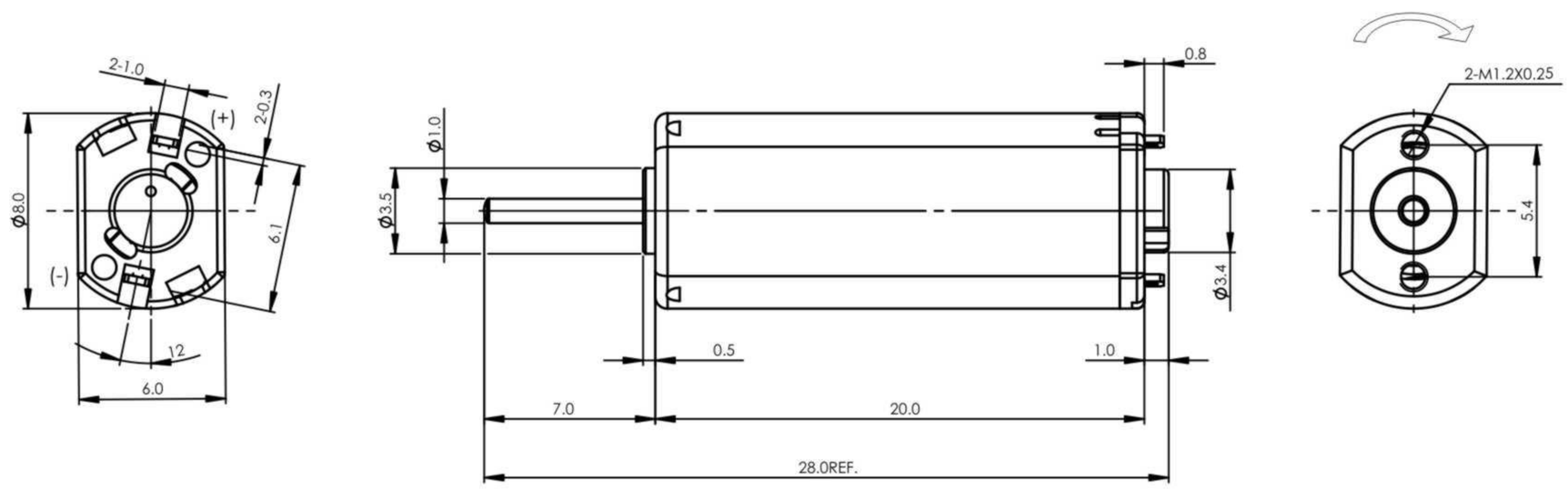

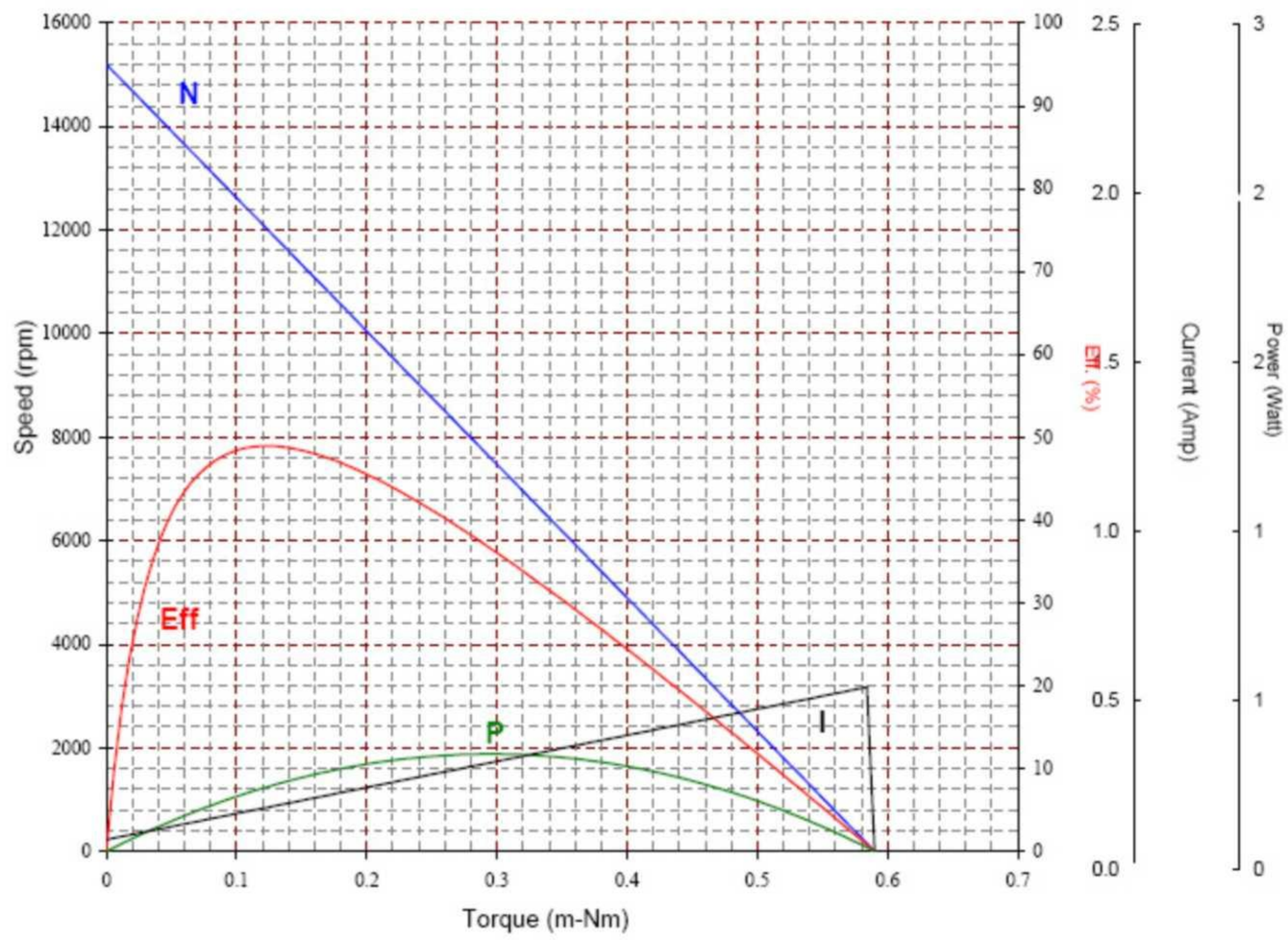

Model: AM08002

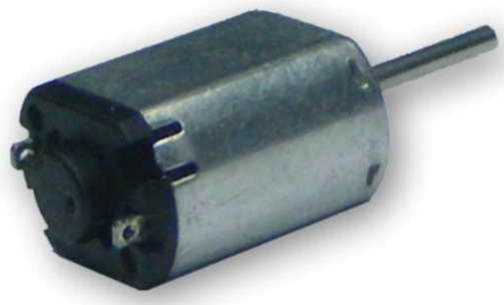

Precious metal-brush motors

OUTPUT: 0.03W~0.10W (APPROX) WEIGHT: 1.586 g (APPROX)

Typical Applications: Audio and Visual Equipment: Portable CD Player/ Car CD Player
Office Automation Equipment: CD/DVD-ROM Drive

Electrical Performance

Motor Code	Voltage		No Load		Maximum Efficiency					Stall		
	Operating Range	Nominal Voltage	Speed	Current	Speed	Current	Torque		Output	Torque		Current
			Rpm	Amp	Rpm	Amp	mNm	g-cm	W	mNm	g-cm	Amp
AM08002	1.00-4.00V	2.00V	12500	0.028	8250	0.056	0.03	0.31	0.026	0.09	1.00	0.11

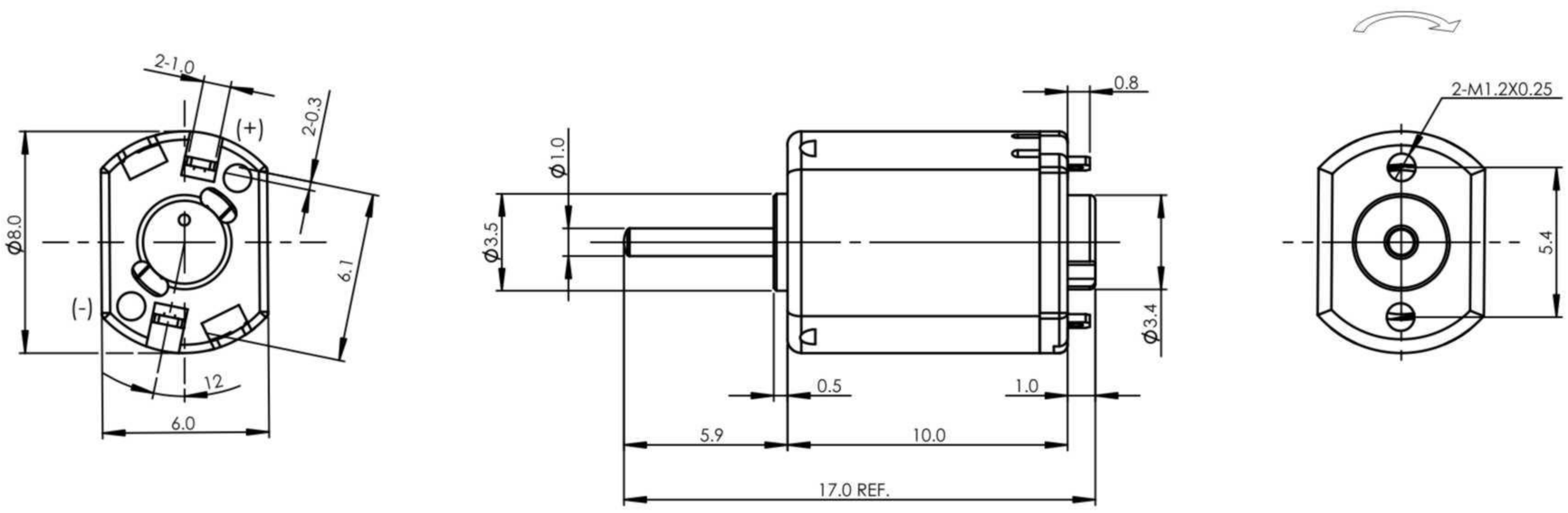

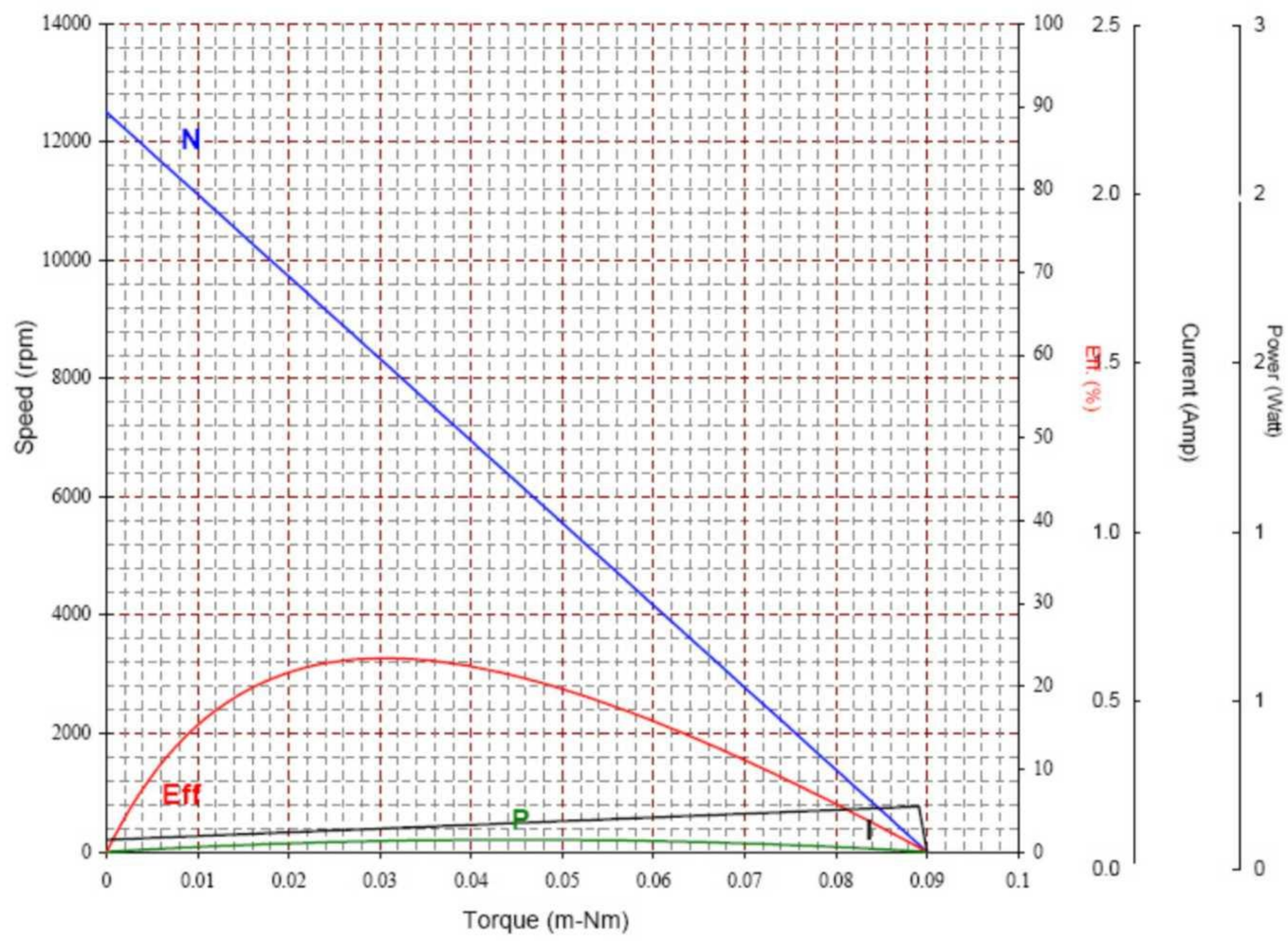

Model: AM08001

Precious metal-brush motors

OUTPUT: 0.07W~0.10W (APPROX) WEIGHT: 2. 614g (APPROX)

Typical Applications: Office Automation Equipment,Note Book PC,Precision Instruments: Camera

Electrical Performance

Motor Code	Voltage		No Load		Maximum Efficiency					Stall		
	Operating Range	Nominal Voltage	Speed	Current	Speed	Current	Torque		Output	Torque		Current
			Rpm	Amp	Rpm	Amp	mNm	g-cm	W	mNm	g-cm	Amp
AM08001	2.50-6.00V	4.40V	17600	0.025	13000	0.07	0.10	1.00	0.14	0.38	3.90	0.19

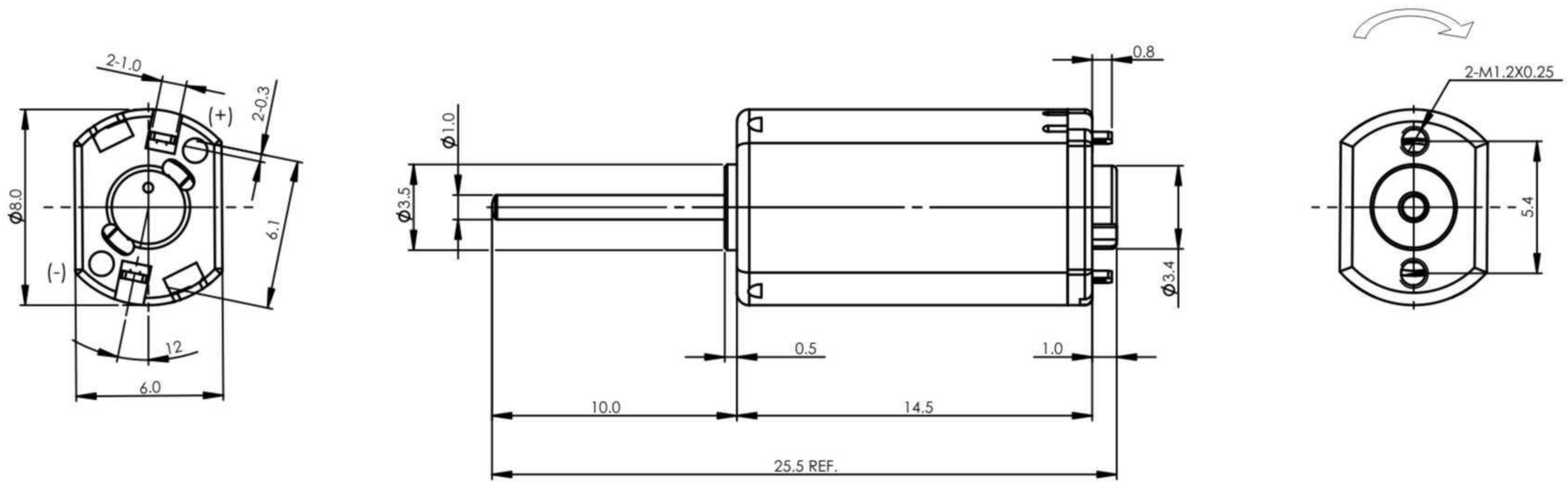

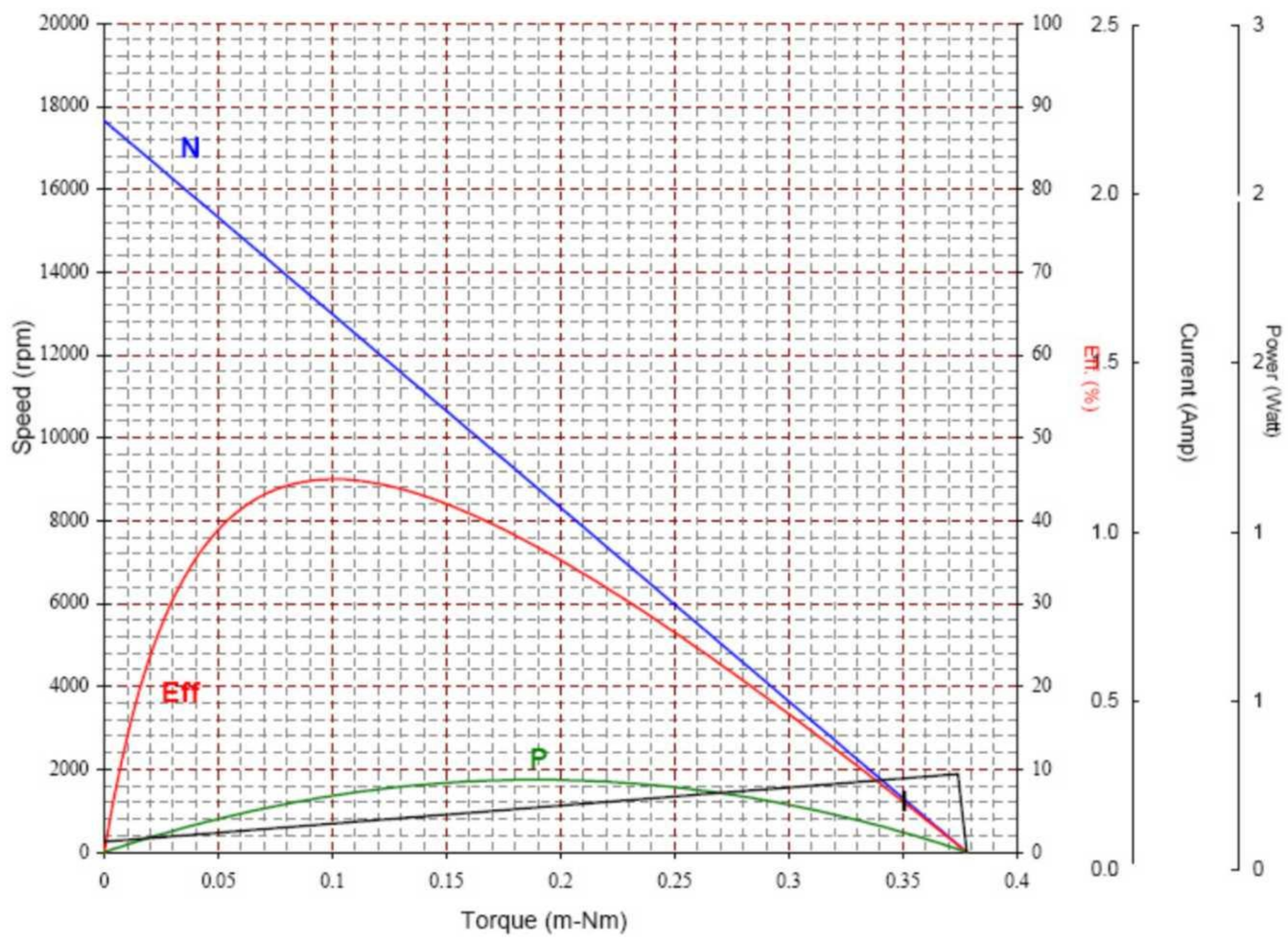

Model: AM06001

Typical Applications: various optical, audio equipment and toys

Electrical Performance

Motor Code	Voltage		No Load		Maximum Efficiency					Stall		
	Operating Range	Nominal Voltage	Speed	Current	Speed	Current	Torque		Output	Torque		Current
			Rpm	Amp	Rpm	Amp	mNm	g-cm	W	mNm	g-cm	Amp
AM06001	1.00-3.00V	1.80V	42400	0.072	31350	0.20	0.045	0.45	-	0.17	1.70	0.586

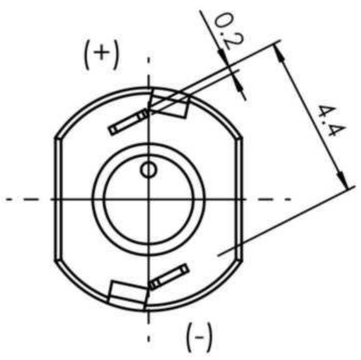

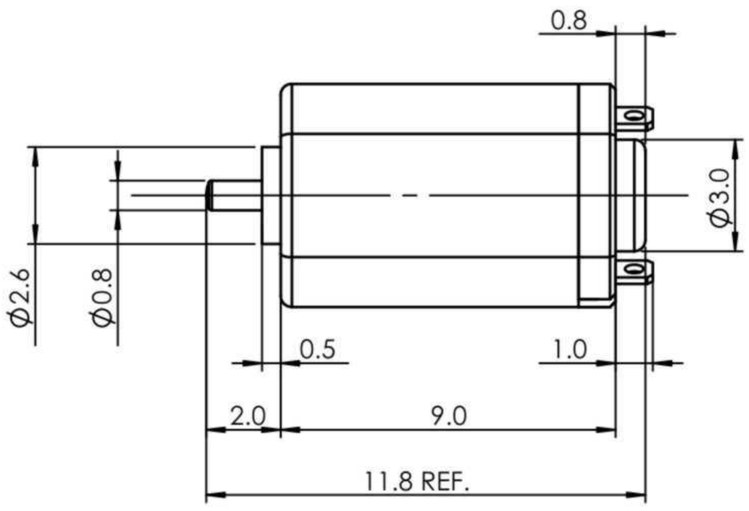

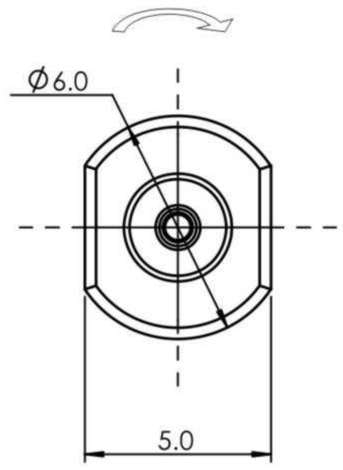

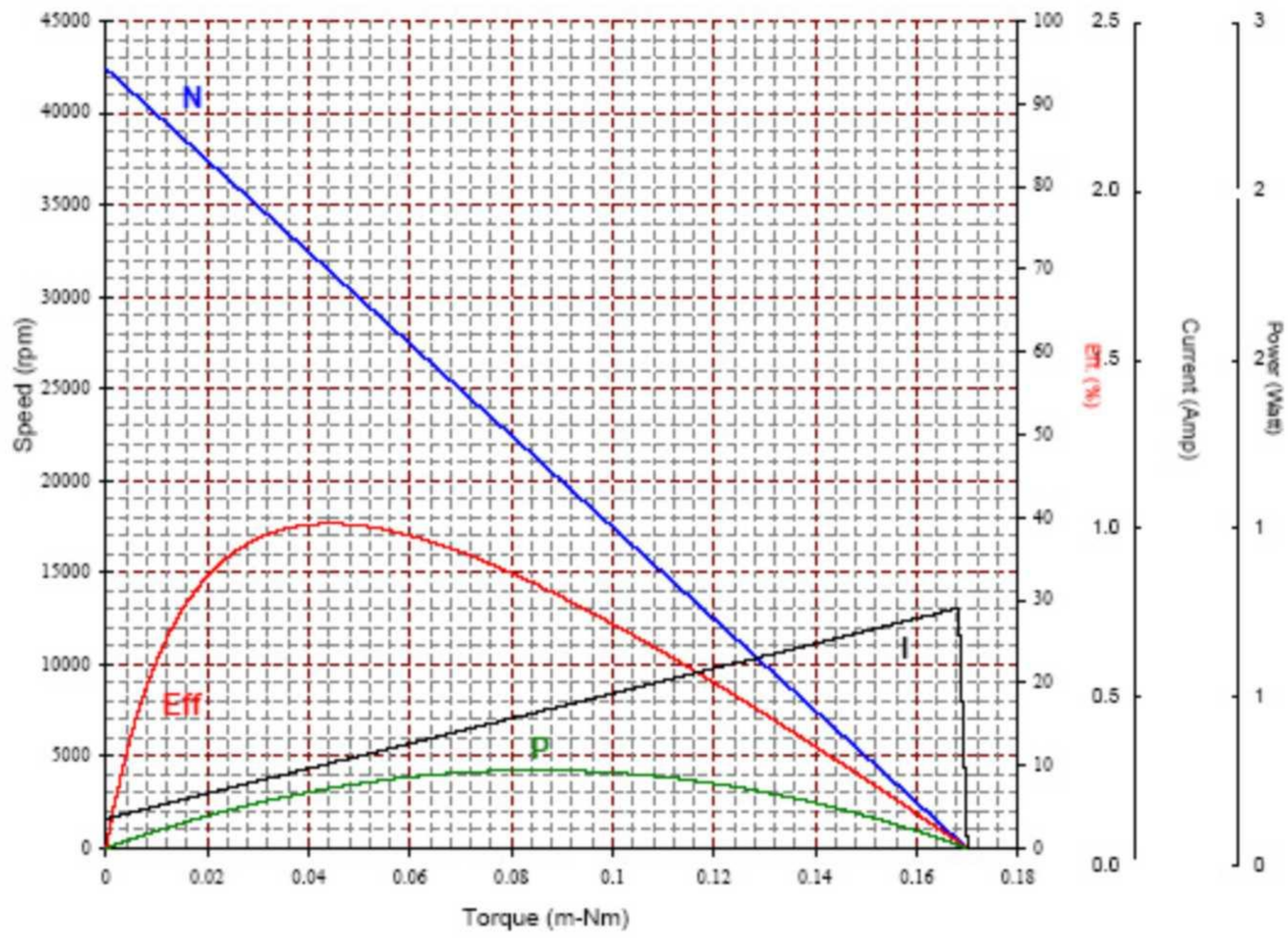

Model: AM04001

Typical Applications: various optical, audio equipment and toys

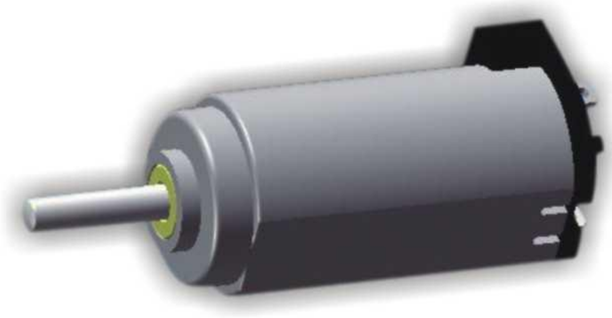

Electrical Performance
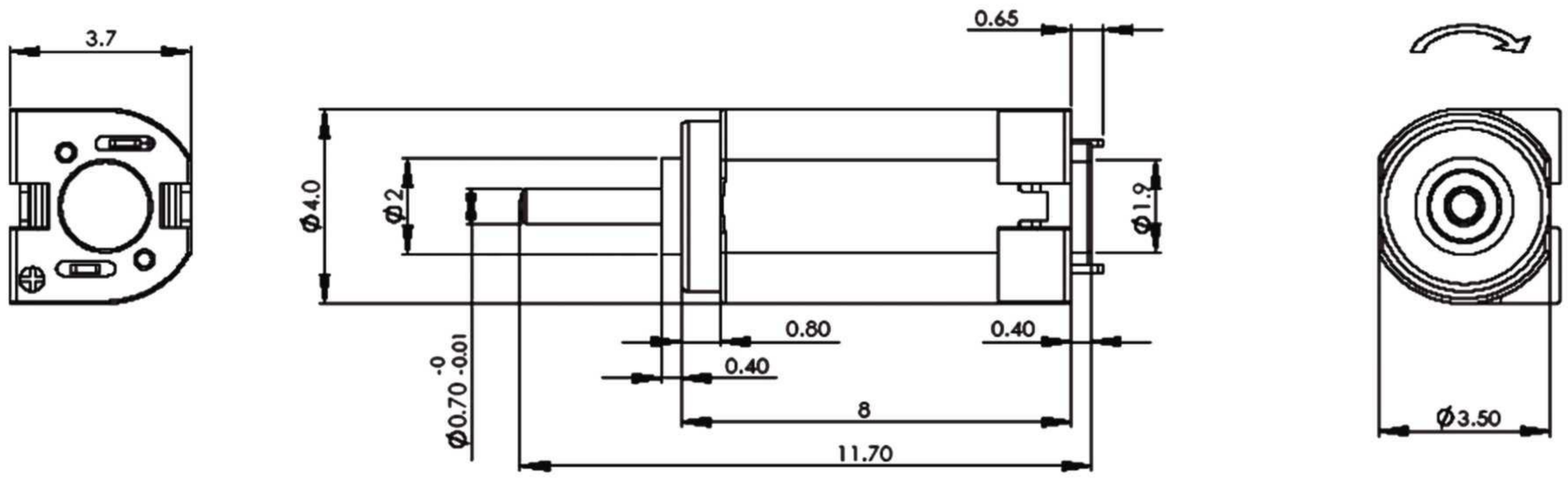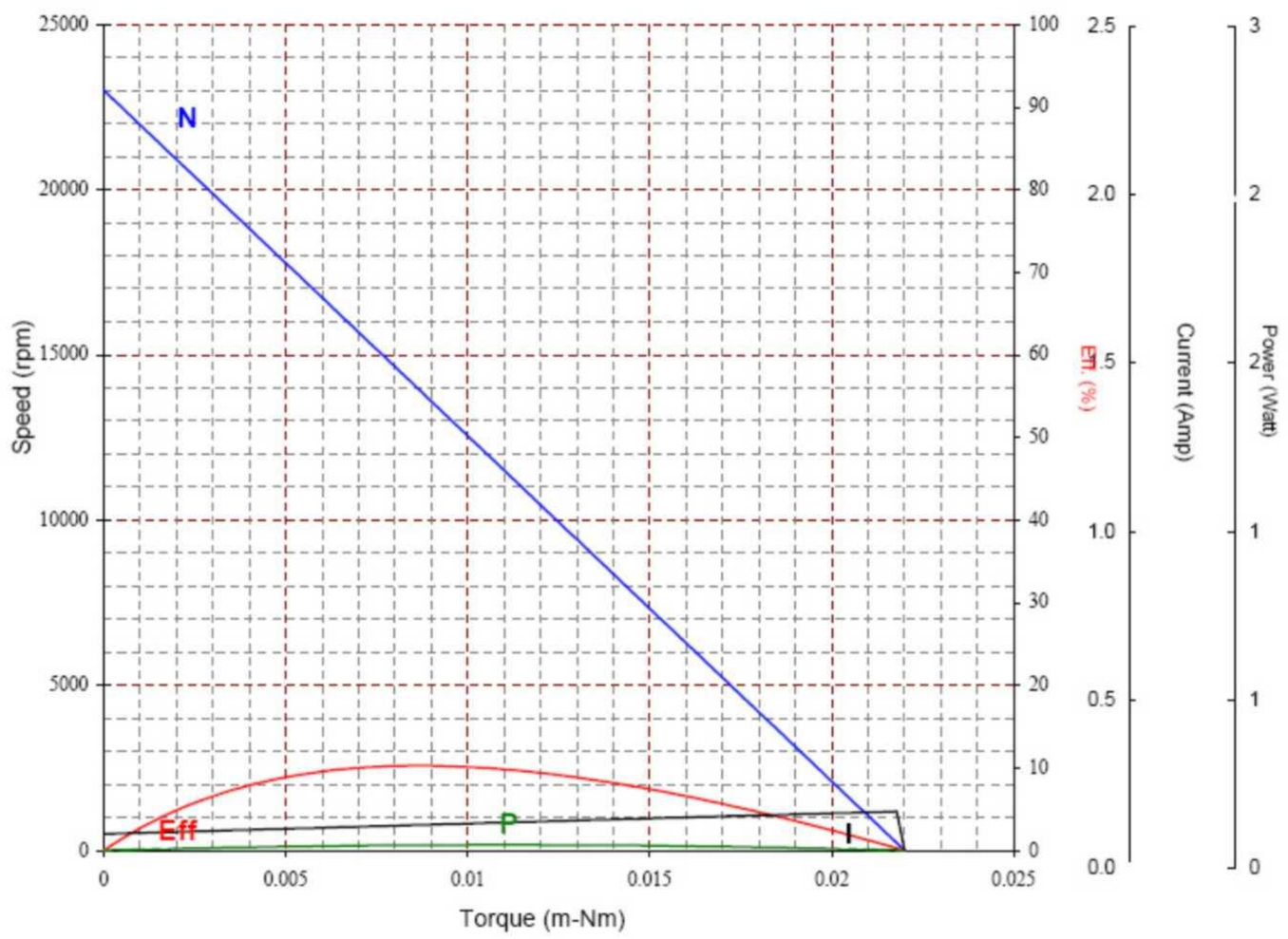
Motor Code	Voltage		No Load		Maximum Efficiency					Stall		
	Operating Range	Nominal Voltage	Speed	Current	Speed	Current	Torque		Output	Torque		Current
			Rpm	Amp	Rpm	Amp	mNm	g-cm	W	mNm	g-cm	Amp
AM04001	1.00-3.00V	2.00V	23000	0.04	14000	0.06	0.01	0.10	0.01	0.02	2.10	0.09